REDROCK™ MEMS-BASED REED SENSOR

RedRock™ MEMS-Based Reed Sensor

Ideally suited to the needs of Medical, Industrial, Instrumentation, Automotive, and other applications where small size, zero power operation, and directional magnetic sensitivity are required, the RedRock™ MEMS-Based Reed Sensor is a single-pole, single throw (SPST) device with normally open ruthenium contacts. The sensor may be actuated by an electromagnet, a permanent magnet, or a combination of both.

RedRock™ MEMS-Based Reed Sensor

- 1.11mm² Footprint – World's Smallest Reed Sensor
- Highly Directional Magnetic Sensitivity
- Hot Switchable
- 50 G Shock Resistance
- Wide Operating Temperature Range
- Hermetically Sealed
- Ideal for SMD Pick and Place
- Tape and Reel Packaging
- RoHS Compliant

APPLICATIONS

- Medical Devices
- Battery Powered Devices
- Prosthetics
- Robotics
- Animal Tracking
- High Resolution Position & Level Sensing

DIMENSIONS

in Millimeters (Inches)

Top View

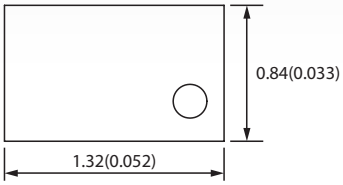

Side View

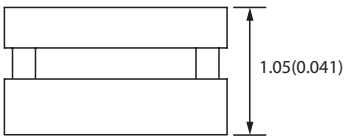

Bottom View

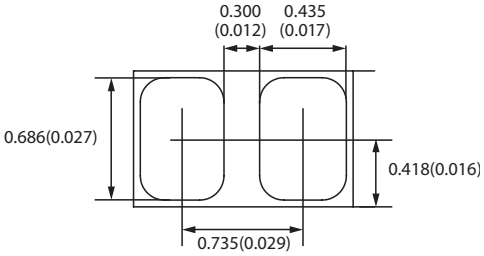

Recommended PCB Land pattern as viewed from bottom of die (pad side)

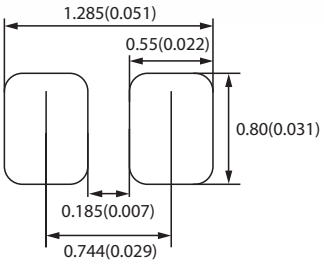

Ordering Information

Part Number RR100-X W TR

- **Model Number**: RR100
- **Typical Magnetic Sensitivity**: J=20mT, K=12mT
- **Package Style**: W=Wafer Level
- **Product Packaging**: TR=Tape/Reel

Operating Temperature Range is -40°C to +85°C

Ordering Information (Evaluation Kit)

Part Number: RR100-EK1

All specifications are typical unless otherwise specified and subject to change without notice.
For more information please refer to Coto Technology's Product Warranty, Trademarks & Disclaimers.

rev. 02092015

REDROCK™ MEMS-BASED REED SENSOR

REDROCK™		RR100		
Parameters	**Units**	**Min**	**Typ**	**Max**
OPERATING CHARACTERISTICS				
Operate Sensitivity[1] - K J	mT		12 20	
Operate Time (including bounce)	µs			500
Release Time	µs			500
ELECTRICAL CHARACTERISTICS				
Switched Voltage	VDC			6
Switched Current	mA DC			1
Breakdown Voltage	VDC		50	
Contact Resistance (Initial)	Ω		10	
Contact Capacitance	pF		0.2	
Insulation Resistance (Min.)	Ω		10^{12}	
LIFE EXPECTANCY				
1.2VDC, 1mA switching load[2]	Operations		10^{7}	
ENVIRONMENTAL RATINGS				
Storage Temperature	°C		-55 to +150	
Operating Temperature	°C		-40 to +85	
Vibration Resistance - Functional[3]	G	100		
Shock Resistance - Functional[4]	G	750		
Shear Force[5]	gm	400		

Notes:

[1] Individual switches may vary in magnetic closure sensitivity by ± 4 mT (Model K) or ± 7 mT (Model J) from the typical value. If your application requires a different sensitivity range, please contact Coto at **redrock@cotorelay.com**.

[2] Life expectancy defined as mean cycles before failure with end of life defined as contact resistance >1000 Ω.

[3] Functional Vibration Resistance is defined as the mechanical-only force (in G, 110 Hz - 3 kHz), that a switch can withstand without causing a contact closure.

[4] Functional Shock Resistance is defined as the mechanical-only force (in G), that a switch can withstand without causing a contact closure.

[5] Shear Force is the mechanical force (applied to the top half, in a plane parallel to the PCB) that a switch can withstand without causing damage to the switch.

For all inquiries,
please contact redrock@cotorelay.com

rev. 02092015

SWITCH ANGLE SENSITIVITY

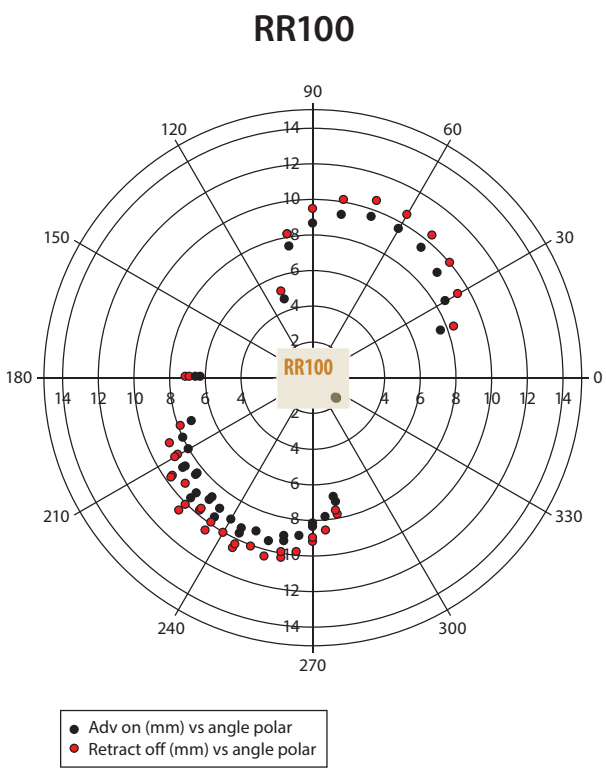

Fig. 1: Black points indicate relative magnetic closure sensitivity of the RR100 switch. Switch viewed from top. Note position of switch orientation dot.

SWITCH FUNCTIONAL DIAGRAM

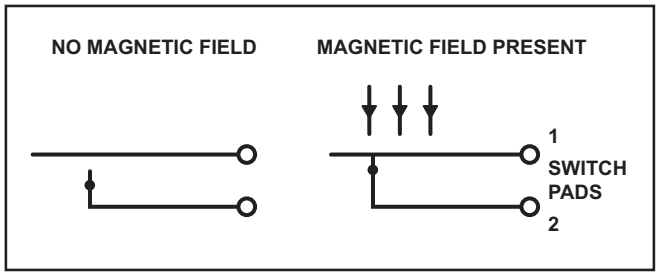

Fig. 2: Switch is magnetically operated, normally-open, single-pole, single-throw (SPST). Closes when immersed in a magnetic field that exceeds 20 mT (Type J) or 12 mT (Type K) Operation is independent of the magnetic polarity.

EXPECTED LIFE

Ten million cycles, 1.2 V 1.2 mA hot switched load, when operated by a magnetic field having twice the nominal closure field. End of life defined as contact resistance exceeding 1000 Ω.

ATTACHMENT DETAILS

The RR100 switch may be attached to the user's circuit board using either SnPb eutectic alloy or SAC alloy solder pastes. Recommended reflow profiles for both types of solder are shown below.

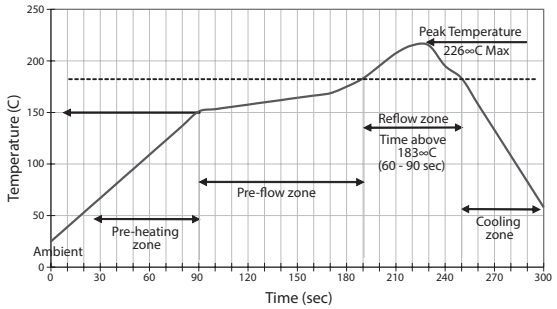

Fig. 3: Recommended reflow profile – SnPb alloy

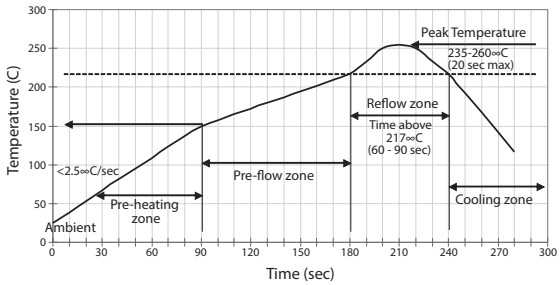

Fig. 4: Recommended reflow profile – SAC alloy.

SWITCH PACKAGING

Standard Packaging for the RR100 switch is Tape and Reel. Dimensions are shown below.

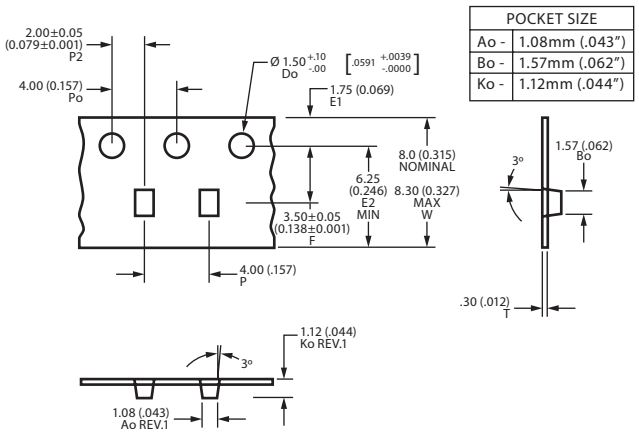

POCKET SIZE	
Ao -	1.08mm (.043")
Bo -	1.57mm (.062")
Ko -	1.12mm (.044")

Fig. 5: Tape and reel Packaging

SAMPLE APPLICATIONS CIRCUITS

1. Conversion to Single Pole Single Throw Normally Closed Operation

In some cases, it is desirable for the switch to open in the presence of a magnetic field rather than to close. This functionality can be achieved with the circuit shown below, which incorporates a P-channel enhancement-mode MOSFET. R2 can be selected in the range of 100 Megohms to several thousand Megohms depending on the characteristics of the MOSFET. When the RedRock switch is open, the gate is negative biased relative to the source, allowing battery current to flow to the load. Conversely, when the switch is closed, the MOSFET turns off. Note that a small quiescent current drained from the battery through R2 while the switch is closed. Bear this in mind when selecting the battery type and value of R2.

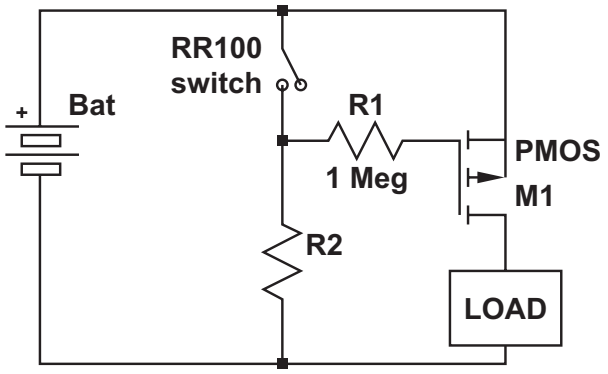

Fig. 6: Conversion to normally closed (N/C) functionality, using P-channel, enhancement mode MOSFET.

2. Interfacing RedRock with Microcontrollers

Most low power microcontrollers, have one or more pins designated as interrupt or "wake-up" pins. Suitably programmed, the microcontroller recognizes a positive or negative logic level transition on the designated pin and changes from a sleep mode where very little power is consumed to full operational mode. The RR100 switch shown in Figure 7 is normally closed by a magnet; when it opens, the wake-up pin goes low, waking up the microcontroller. R2 should be chosen to be as large a value as possible, but no higher than one-tenth the input impedance of the wake-up pin. This will minimize the quiescent current draw through R1 and R2 while the switch is closed. Consult the microcontroller documentation for further details.

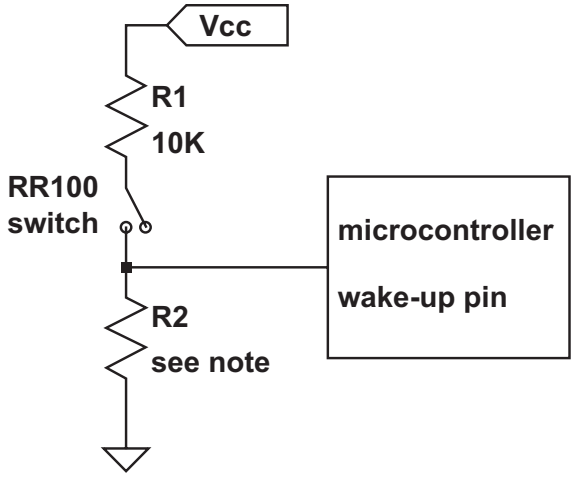

Fig. 7: Typical method of interfacing an RR100 switch to a low-power microcontroller. When RR100 switch opens, wake-up pin goes logic low, bringing microcontroller out of sleep mode. R2 should be no greater than one-tenth of the microcontroller's input pin impedance.

GENERAL APPLICATIONS NOTES AND INFORMATION

1. Choosing magnets

The RR100 switch can be operated by any permanent magnet that generates a magnetic field at the required operating distance that is greater than the lower end of the switch's nominal closure sensitivity range. For example, a RR100-JWTR switch will close when immersed in a field that exceeds 20 mT, when it is angled towards the pole of the magnet at the angle shown in Figure 1. This is the minimum required field; for optimum contact life, a higher field is desirable, and there is no maximum field that will damage the switch. Bear this in mind when designing a switch-magnet system.

2. mT vs A/m, Gauss and Oe

Coto specifies switch closure sensitivity in mT (millitesla). One mT is equivalent to exactly 10 Gauss or approximately 1.257 A/m (Amps per meter). One Oe (Oersted) = 1 Gauss in air.

3. Magnetic overdrive

Magnetic overdrive is any excess magnetic field above the minimum level needed to just close the switch. For example, if the nominal closure field is 20 mT and the switch is immersed in a field of 40 mT, 100% overdrive is being applied. Overdrive is desirable, since higher forces are applied to the contacts, and the contact resistance is reduced. There is no level of overdrive

GENERAL APPLICATIONS NOTES AND INFORMATION, CONT.

that can damage the switch. Therefore, use the strongest, largest magnet that is practical for the application.

4. High fields cannot damage switch

Strong magnetic fields will not damage the switch or change its closure sensitivity.

5. Polarity insensitive

The switch responds equally to N (positive) or S (negative) fields.

6. Optimum orientation of magnet relative to switch

The switch has maximum closure sensitivity when the magnet is oriented at 60o relative to its long axis. Refer to the diagram in Fig. 1, and note that the position of the location dot is important.

7. Magnetic environment near the switch is important

Ferrous materials such as metal frames and component enclosures etc. located near the magnet and switch can alter the switch closure sensitivity, by attenuating or enhancing the field reaching the switch. Coto recommends that the switch and magnet be tested in the applications environment, including all ferrous structures.

8. Shunts and field concentrators

Ferrous structures located near the magnet and switch can sometimes be used advantageously to increase the magnetic field strength near the switch and increase its apparent magnetic sensitivity. These arrangements can be investigated experimentally, but simulation using magnetic modeling programs is more efficient.

9. Contact debouncing

Since the RR100 is a mechanical switch, the contacts may bounce after closure. Implement a hardware or software debounce solution if contact bounce is likely to cause switching logic problems.

GLOSSARY OF TERMS

Dry-Reed Switch: A dry-reed switch is an electrical switching assembly containing one or more ferromagnetic contact blades, hermetically sealed in a protective envelope, that are forced into contact by an external magnetic field. The field may be generated by a current-carrying coil of wire, a permanent magnet, or a combination of both.

Operate Value (mT): The mT value at which normally-open contacts close. Lower values reflect higher sensitivity.

Operate Time: The operate time is the time between the instant of application of a magnetic field to a dry-reed switch and the instant of the first physical closing of this switch. The operate time does not include bounce time.

Release Value (mT): The mT value at which normally-open contacts, held closed by a magnetic field, will re-open as field strength is reduced.

Release Time: The release time is the time between the instant of removal of an applied magnetic field to a dry-reed switch and the instant of the first physical opening of this switch. The release time does not include bounce time.

Bounce: Bounce is a momentary opening of a switch after initial closing, or a momentary closing after initial opening.

Bounce Time: The bounce time is the interval of time between the instant of initial closing (or opening) and the instant of final closing (or opening) of the dry-reed switch.

Dry-Reed Switch Contact Resistance: The dry-reed switch contact resistance is the resistance of the dry-reed switch under specified conditions of measurement.

INFORMATION RESOURCES

The following Applications Notes and White Papers relating to the RR100 switch are available in the Resource Library area of the Coto Website.

1. White Paper: "MEMS-Based Magnetic Reed Switch Technology"
2. IEEE Holm Conference Paper: "A High Aspect Ratio Microfabricated Switch Capable of Hot Switching"
3. Tech Tips: Soldering Guidelines for the RedRock Switch
4. Tech Tips: Angular Sensitivity Map of RedRock Switch
5. Tech Tips: Optimal Z-Axis Magnet Positioning of RedRock Switch

COTO TECHNOLOGY PRODUCT WARRANTY

Coto Technology, Inc. ("Coto") warrants that during the six (6) or eighteen (18) month period ("Warranty Period") from the date of Coto's shipment of switches or relays and other small signal switching products ("Products"), the Products will be free from defects in material and workmanship. This Warranty shall not apply to defects caused by disasters such as fire, flood, wind, and lightning, or by the actions or inactions of any party other than Coto including improper storage, installation, use or maintenance of the Products. ALL OTHER WARRANTIES, WHETHER EXPRESSED OR IMPLIED OR ARISING BY OPERATION OF LAW, COURSE OF DEALING, USAGE OF TRADE, OR OTHERWISE, ARE EXCLUDED. THERE ARE NO IMPLIED WARRANTIES OF MERCHANTABILITY OR FITNESS FOR ANY PARTICULAR PURPOSE. If during the Warranty Period Customer discovers a defect in the material or workmanship of the Products, notifies Coto in writing within five (5) days of such discovery, and substantiates that the Products have been installed, maintained and operated in accordance with Coto's recommendations and standard industry practice, Coto shall (at its option) repair or replace the defective Products or refund the purchase price of the defective Products less the value of any portion of the Products retained by Customer. Repair or replacement of the Product shall not extend the Warranty Period in any manner. THESE REMEDIES CONSTITUTE CUSTOMER'S EXCLUSIVE REMEDIES AGAINST COTO FOR BREACH OF WARRANTY WITH RESPECT TO THE PRODUCTS. In no case shall Coto be liable for any special, incidental or consequential damages (including, without limitation, labor, loss of profits, loss of savings or revenue, loss of use of the Products, cost of capital, cost of any substitute Products, facilities or service, downtime, the claim of third parties including customers, and injury to property) whether due to delays in the production, shipment or delivery of the Products or to causes within Coto's control and whether based upon breach of any warranty, breach of contract, negligence, strict tort, or any other legal theory. Any legal action for breach of warranty must be commenced within the Warranty Period. If the Products are manufactured in accordance with design data approved by the Customer; or if they have been modified or altered without Coto's consent; or if the Products have been misused, misapplied, damaged or used negligently, Customer agrees to hold harmless and indemnify Coto against any loss, cost, damage or expense, including, without limitation, cost of defense, attorney's fees, inspectors' fees and/or testing, resulting from (a) third party claims for personal injuries or property damage, whether direct or indirect, actual or alleged, consequential or otherwise, notwithstanding any actual or alleged defects or hazard inherent in the Products or negligence of Coto, its agents, employees or subcontractors, or (b) any recall, inspection, testing, replacement or correction or the Products, whether required by governmental authority or otherwise, or (c) the violation of any law, regulation, rule, order or restriction of any governmental authority resulting from or incident to the sale, delivery, installation and/or assembly of the Products or (d) any actual or alleged infringement of any United States or foreign patent, copyright or similar common or civil law right.

rev. 02092015

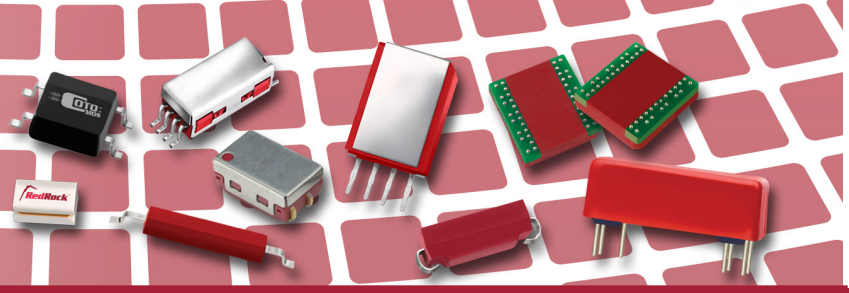

THE WORLD LEADER IN SMALL SIGNAL SWITCHING SOLUTIONS

Reed Relays & Molded Reed Switches

New CT10-G2 Molded Reed Switch

New Hi-Temp PICO Reed Relays

One Billion Cycles Reliable

The World's Smallest Reed Sensor

Highly Directional Magnetic Sensitivity

Small Size, Big Power

MEMS Processing Meets Reed Attributes

- Zero Power Consumption
- ESB Insensitivity
- Wafer Level Package

MOSFET Relays for Any Application

Low On-Resistance

Low Leakage Current Available

DIP, SMD, and SOP Packages Available

SSOP & High Current Versions

66 Whitecap Drive
North Kingstown, RI 02852
401-943-2686 • Fax: 401-942-0920
www.cotorelay.com • redrock@cotorelay.com

rev. 02092015